HYDRANAUTICS
A Nitto Denko Corporation
www.membranes.com

Mark Wilf Ph. D.

EFFECT OF NEW GENERATION OF LOW PRESSURE, HIGH SALT REJECTION MEMBRANES ON POWER CONSUMPTION OF RO SYSTEMS

Abstract

The performance of commercial composite reverse osmosis membranes has been continuously improving, since its introduction in the late seventies. An additional significant improvement of membrane performance has been achieved at the beginning of 1995, when new composite polyamide brackish water RO membrane technology has been introduced. The new membrane material is characterized by a very high specific water flux, about double the flux of the previous generation of polyamide composite brackish membranes while maintaining low salt transport. The nominal salt rejection of the new membranes is similar to the conventional composite polyamide brackish membranes. Higher specific permeate flux results in a lower feed pressure requirement in the RO system and lower power consumption. However, in order to fully utilize the power saving potential of the new technology, at some conditions of feed salinity, temperature and operating parameters, the design of RO system equipped with new membranes has to be modified, as compared to the design of system with conventional membranes. This paper will discuss characteristics of the new membrane technology, evaluate the impact of improved membrane performance on RO system design and the resulting power consumption of the RO process. The potential for additional improvement of membrane performance will be analyzed as well.

Introduction

Feed pressure required to produce the design product flow from RO system is a function of number of process parameters, some of which are interrelated. These parameters can be categorized into three basic categories. The first two categories are group of site specific parameters and system design parameters. The site specific category includes feed salinity and feed temperature. The second category, system design parameters, includes average permeate flux, recovery ratio and pressure drop along the system. The specific permeate flux of the membrane belongs to separate category of intrinsic properties of the RO membrane material. The specific permeate flux, commonly expressed in units of flow rate per units of pressure, defines the value of net driving pressure (NDP) required to produce a given rate of average permeate flux in the RO system. The current offering of commercial RO membranes, in spiral wound configuration, for treatment of brackish water, consists of four major categories: asymmetric cellulose acetate, low and ultra low pressure composite polyamide brackish and composite polyamide softening (nanofiltration). The performance of different membrane materials can be characterized and compared in terms of NDP required to produce a given permeate flux and the corresponding salt passage. Table 1 summarizes representative values of NDP and salt passage of commercial membrane categories at an average permeate flux rate of 15 gallons/ft^2-day and feed water temperature of 25 C.

Table 1. Representative performance of commercial membranes at a flux rate of 15 gfd, (25 l/m^2-hr) and feed temperature of 25 C.

	NDP, bar	NDP, psi	Specific flux, gfd/psi	Salt passage,%
Cellulose acetate(CAB)	7 - 21	245 - 305	0.05 - 0.06	3 - 8
Low pressure composite polyamide (CPA)	8 - 10	115 - 145	0.10 - 0.13	0.8 - 1.6
Ultra low pressure comp. polyamide (ESPA)	4 - 5	60 - 70	0.20 - 0.25	1.3 - 2
Softening composite polyamide (ESNA)	3 - 5	45 - 75	0.20 - 0.35	10 - 30

The third entry in Table 1 contains the comparable performance parameters of the new composite membrane, designated as ESPA, introduced commercially at the beginning of 1995. The new membrane is characterized by a very high specific water flux, about double the flux of the current generation of polyamide composite brackish membranes (CPA). This new membrane technology achieves flux rates comparable or higher than the existing softening membranes, while maintaining low salt passage, similar to the conventional composite polyamide brackish membranes. Until recently, the conventional, low pressure composite polyamide membrane was the membrane of choice for brackish water desalting due to high stability of membrane material, low operating pressure and high salt rejection. Cellulose acetate membrane is mainly used for applications where a continuos presence of chlorine in the feed water is required. The introduction of the ultra low pressure membrane presents an opportunity for significant reduction of power consumption of RO process due to operation at a lower feed pressure. Realization of this cost saving potential requires RO system design which will minimize pressure loses and optimize utilization of all installed membrane area in production of permeate.

Feed pressure requirements of the RO process

Conventional membrane technology

At a given set of design and operating conditions the feed pressure is determined by the net driving pressure (NDP) required to produce the design value of average permeate flux. The NDP is related to the design value of the average permeate flux (APF) of the RO system and specific permeate flux (SPF) of selected membrane type by the following relation:

$$NDP = APF/SPF \qquad (1)$$

The design feed pressure (P_f) is equal to the sum of NDP required to produce average permeate flux, osmotic pressure corresponding to an average feed salinity (P_o), average pressure drop (P_d) along the RO system and permeate pressure (P_p):

$$P_f = NDP + P_o + P_d + P_p \qquad (2)$$

It is assumed in equation 2 that the permeate osmotic pressure is negligible. Permeate salinity produced by current, high salt rejection, membranes is approximately 1 - 2 % of the average feed salinity, therefore its osmotic pressure can be neglected. According to equations 1 and 2 the NDP and the required feed pressure is directly proportional to the design average permeate flux of the RO system and inversely related to the specific permeate flux of the selected membrane type. In a conventional RO system configuration, the NDP decreases along the system due to an increase in feed osmotic pressure and a decrease in feed pressure, mainly due to the flow friction losses (pressure drop) in the membrane element feed channels. In order to effectively utilize the installed membrane area, the feed pressure in the RO system should be high enough to provide a meaningful NDP also in the tail element, where the osmotic pressure has the highest value. Fig. 1 shows the pressure relationship for a two stage system, using conventional composite polyamide membranes. The membrane element array corresponds to a two stage system, seven elements per pressure vessel, fourteen elements of a total system length. The operating parameters used for calculations of osmotic pressure of the feed-concentrate stream are feed salinity 1500 ppm, feed water temperature 25 C and system permeate recovery 85%. The minimum feed pressure requirement is the pressure value providing positive NDP at the end of the system.

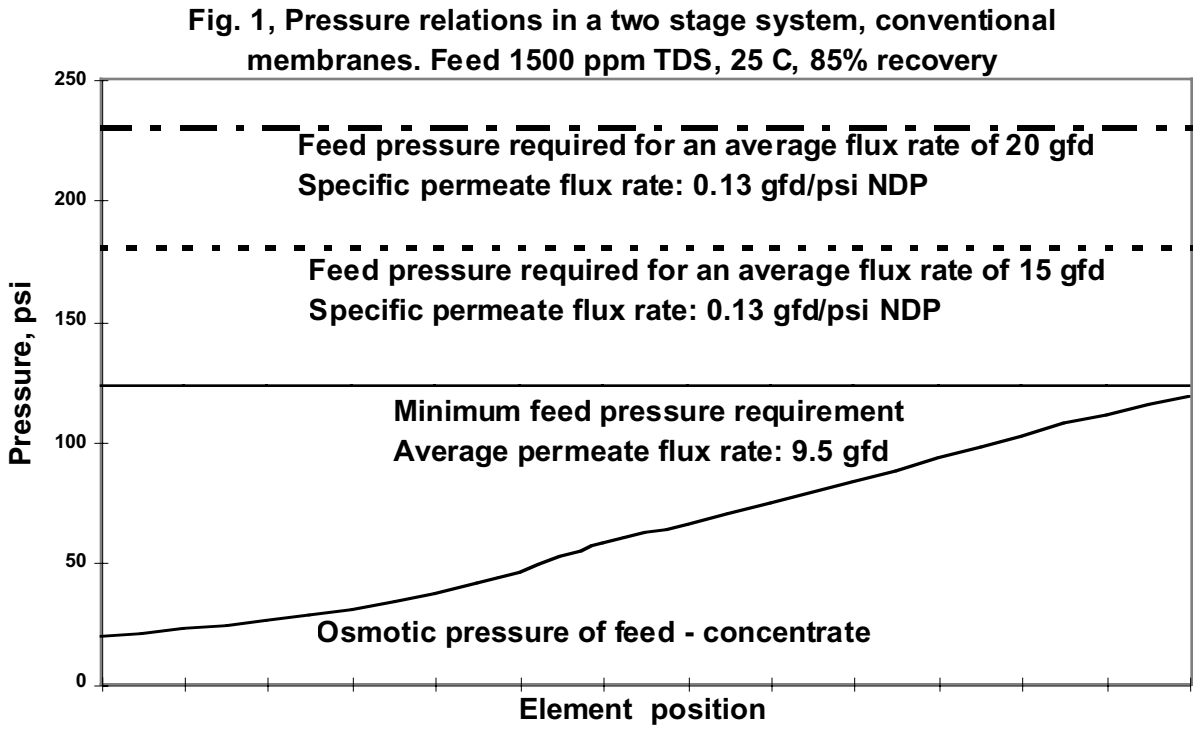

In the above case the feed pressure has to be at least 125 psi to compensate for the osmotic pressure of the concentrate and pressure drop along the system. For a given operating conditions of feed salinity, temperature and recovery rate, the average feed osmotic pressure and pressure drop would amount together to about 52 psi. Therefore, at the feed pressure of 125 psi, the average NDP in the system would be approximately 73 psi. According to equation 1, for a specific permeate flux rate of 0.13 gfd/psi, of the CPA2 membrane type used, this value of the feed pressure would be sufficient to produce a system average permeate flux rate of only 9.5 gallon/ft^2-day (gfd). Majority of RO systems operate at an average flux rate of 15 to 17 gfd. In order to increase the average flux rate a higher feed pressure would have to be applied. As indicated in Fig. 1, flux rate of 15 gfd would require feed pressure of 185 psi, and approximately 230 psi pressure would be required for an average flux rate of 20 gfd. At this range of average permeate flux, the feed pressure is sufficiently higher than the osmotic pressure of the concentrate. The average permeate flux (APF) is related to the system permeate flow (PF) and membrane area (MA) installed in the RO system according to the following equation:

$$APF = PF/MA \qquad (3)$$

A higher design average flux rate corresponds to a higher NDP (equation 1), and therefore to a higher feed pressure. This results in higher specific power consumption. The number of membrane elements and the size of the RO train is inversely proportional to the value of the average flux. Higher average permeate flux usually results in lower number of membrane elements and lower capital cost. The permeate flux decreases along the RO unit due to a decrease in NDP. At a given set of operating parameters, the distribution of the average permeate flux from individual elements, along the RO system, is a function of the feed water temperature. Higher feed water temperature results in a higher permeate flux in the lead elements and a larger slope of flux decline along the system. Fig. 2 shows the calculated distribution of flux rates from individual membrane elements in the RO unit for the temperature range of 5 C to 35 C. The calculations were conducted for a nominal (at 25 C feed temperature) specific flux rate of 0.13 gfd/psi, feed water salinity 1500 ppm and 85% recovery rate. The above specific flux rate corresponds to a conventional composite brackish membrane. For the above range of operating conditions, even at the highest feed water temperature of 35 C, the membrane element in the last position would still produce a significant permeate flux.

New membrane technology.

The ESPA membrane technology is characterized by a specific permeate flux of 0.23 gfd/psi, which is almost 80% higher than the specific flux of conventional composite membranes. Correspondingly, the new membrane requires only 55% of the NDP required by the conventional

Fig.2, Permeate flux of individual elements, conventional membranes

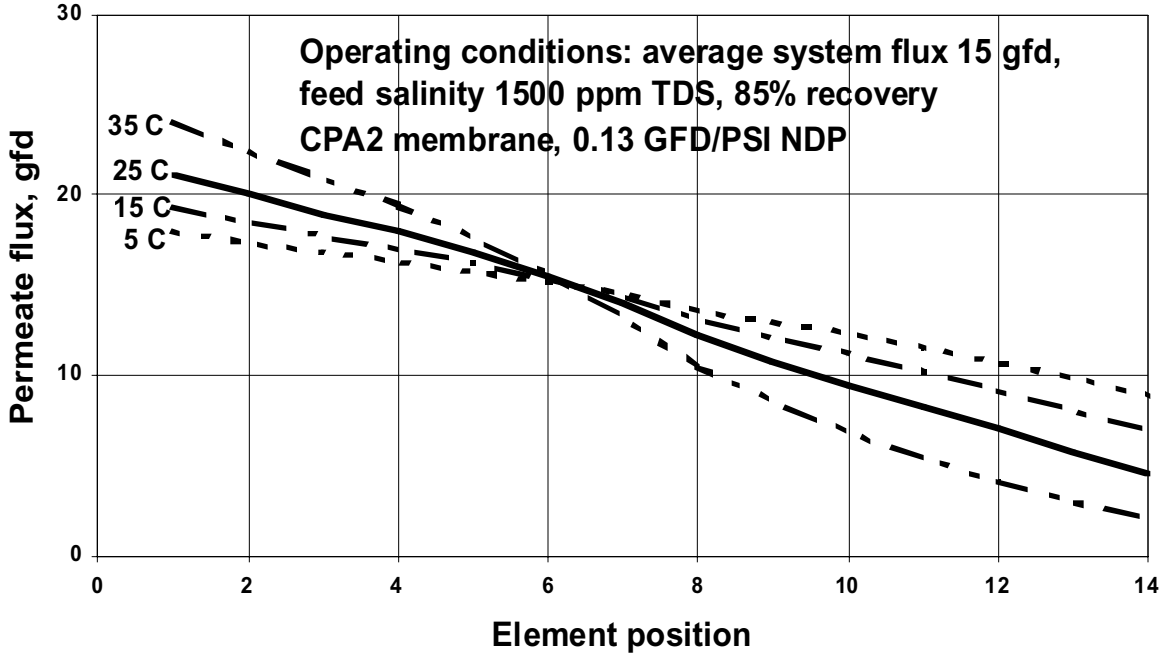

composite membranes to produce the same average flux rate. Fig. 3 shows the distribution along the RO unit of feed pressure, osmotic pressure and NDP calculated for the ESPA membranes. The calculations were conducted for the same operating conditions as used for performance calculations of CPA2 membranes (Fig. 1). The required feed pressure calculated for ESPA elements is much lower than required for the CPA2 membranes. In both systems, the osmotic pressure of the concentrate has approximately the same value (the recovery rate is the same). Therefore, the NDP in the tail part of the system approaches very low values for system with ESPA elements. Fig. 4 shows the average flux distribution for individual elements calculated for a system equipped with ESPA membranes. For the operating conditions of an average system flux rate of 15 gfd, at a feed water temperature of 25 C and higher, the last elements in the membrane array produce negligible permeate flux. Operating the RO system at a higher average permeate

Fig. 3, Pressure relations in a two stage system, high flux membranes

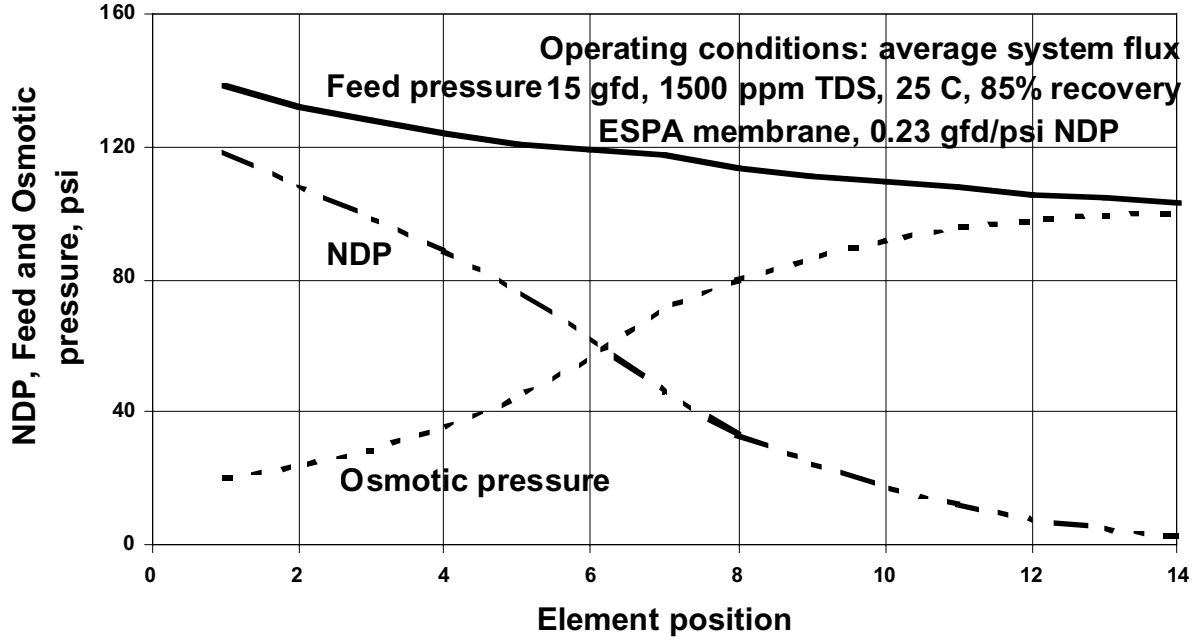

flux rate provides an improved flux distribution at the end of the system. The average permeate flux from individual elements is shifted to higher values. However, with increasing average system permeate flux rate, the lead elements may reach very high permeate flux rates, especially at the high feed water temperature range. This high permeate flux values may create

Fig. 4, Permeate flux of individual elements, high flux membranes.

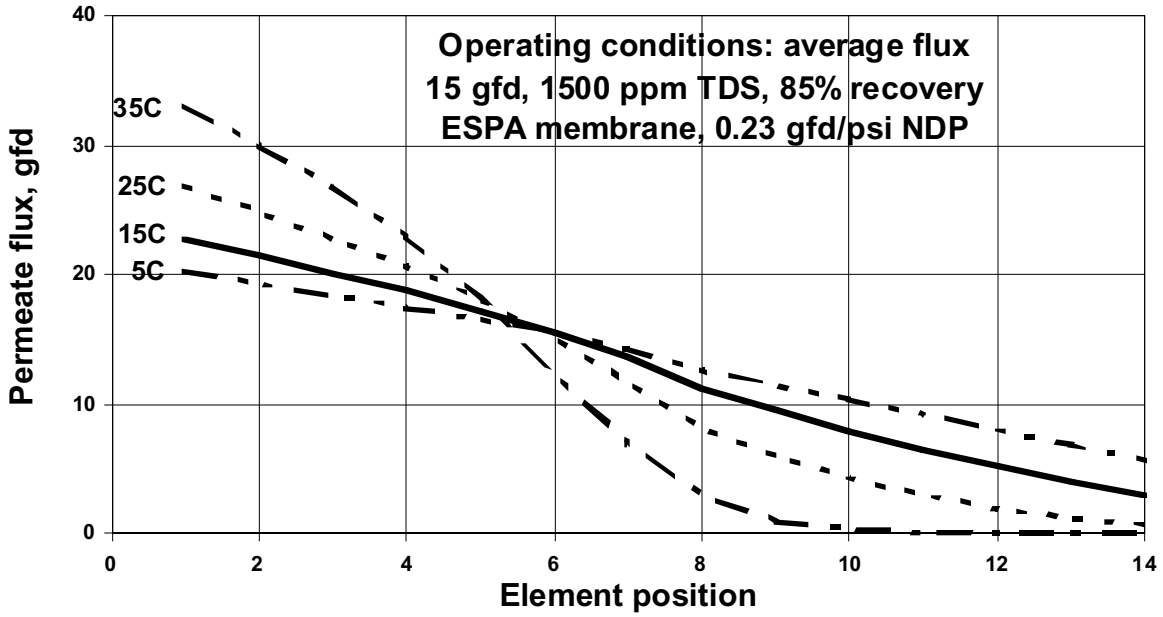

operational problems due to accelerated fouling. Also, due to increased permeate flow in the permeate channel, permeate pressure losses will increase in the lead element. If the pressure losses in the permeate channel are high compared to the average NDP, this may result in decrease of hydraulic efficiency of the membrane element.

Alternative system design.

The permeate flux distribution of RO systems equipped with ultra low pressure membranes can be improved by applying a modified system designs. One method is to throttle the permeate flow from the lead elements. It can be accomplished by installing a valve on the permeate line of the first stage, as shown schematically in Fig. 5. By partially closing this valve, permeate pressure will be built in the permeate line. Increasing permeate pressure will reduce available NDP (equation 2), which will result in a reduction of the flux rate from the first stage. To produce the required permeate flow from the system, the feed pressure would have to be increased to provide an increased permeate flux from the subsequent stages. An alternative method, which provides

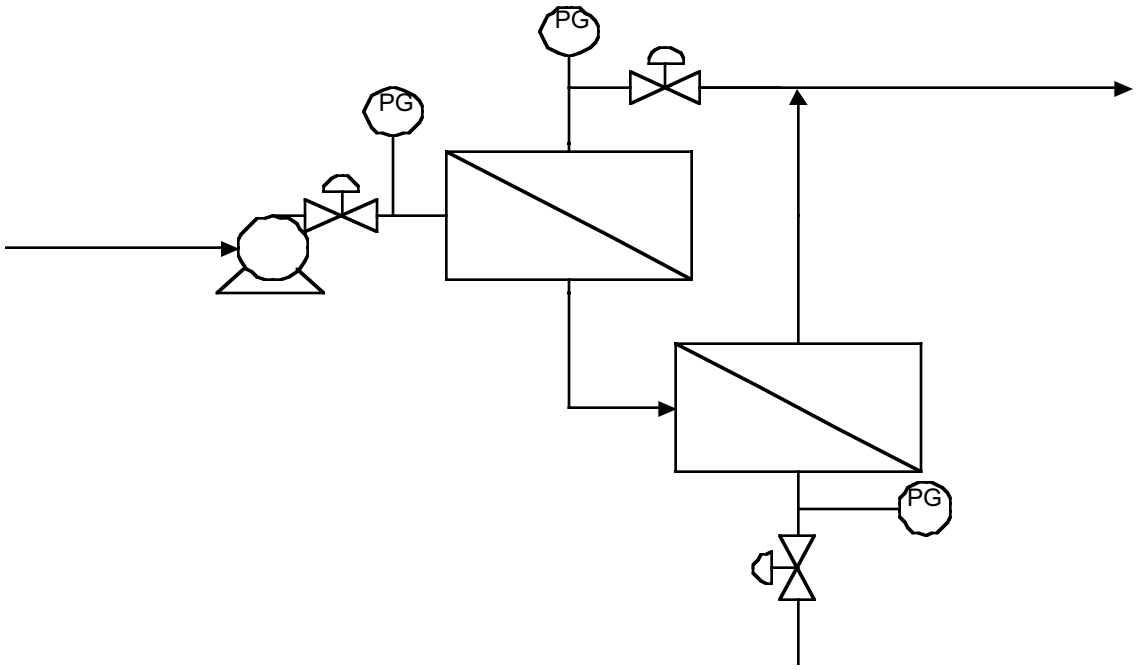

Fig 5. Flow diagram of an RO system with permeate backpressure

similar results, is to incorporate a booster pump, usually on the feed line to the last stage. The diagram corresponding to this configuration is shown in: Fig. 6. The net result is identical, as far as flux distribution is concerned, to the permeate throttling configuration. The major benefit of this second design approach is the avoidance of energy losses associated with permeate throttling. The flux distribution corresponding to this design alternative is shown in fig. 7. The third design approach is to use two types of the membrane elements in the same system. The lower specific flux CPA2 membrane elements would be installed in the lead position, where the NDP has the highest value. Those will be followed by ESPA to compensate for the NDP decrease. The flux distribution corresponding to the last alternative is shown on Fig. 8 The ESPA membranes have relatively high salt rejection, comparable with CPA2 membranes. Therefore, they can be operated also in the tail position, in a hybrid system, without significant penalty of increased permeate salinity.

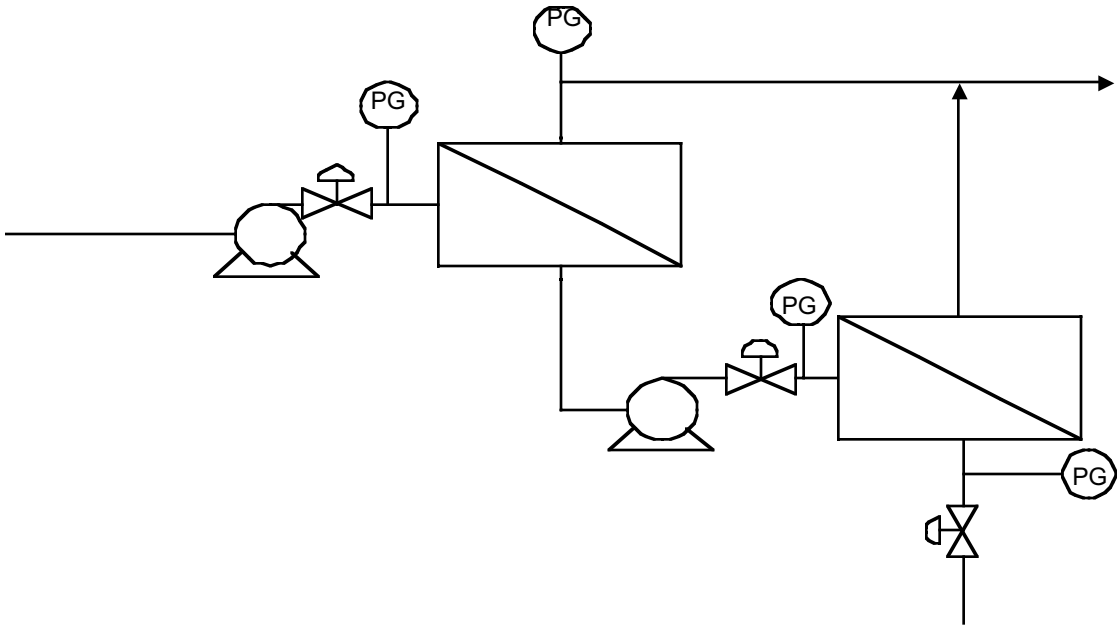

Fig 6. Flow diagram of an RO system with interstage booster pump

Power consumption in an RO unit.

The combined power consumption of the RO process is a contribution of the power required for the pumping of raw water, compensate for pressure losses in the pretreatment system, operation

of auxiliary equipment, driving of high pressure pumps and transferring of permeate. The electric motor of the high pressure pump utilizes most of the energy required in the RO system. The feed pressure required to create a NDP for the reverse osmosis process will be affected by the type of membrane used (the value of the specific permeate flux) and system configuration. Specific power consumption (SPC), attributed to the high pressure pump, is a function of feed pressure (P_f), recovery rate (R) and efficiencies of the pump and electric motor (Ep, Em).

$$SPC = K^* P_f/(R^* Ep * Em) \qquad (4)$$

K is the units conversion constant.

The above relationship is valid for a system operating with a single feed pump. For a system operating with an interstage booster pump, the power required to pump the interstage feed flow

Fig. 7, Permeate flux of individual elements, system with interstage booster pump

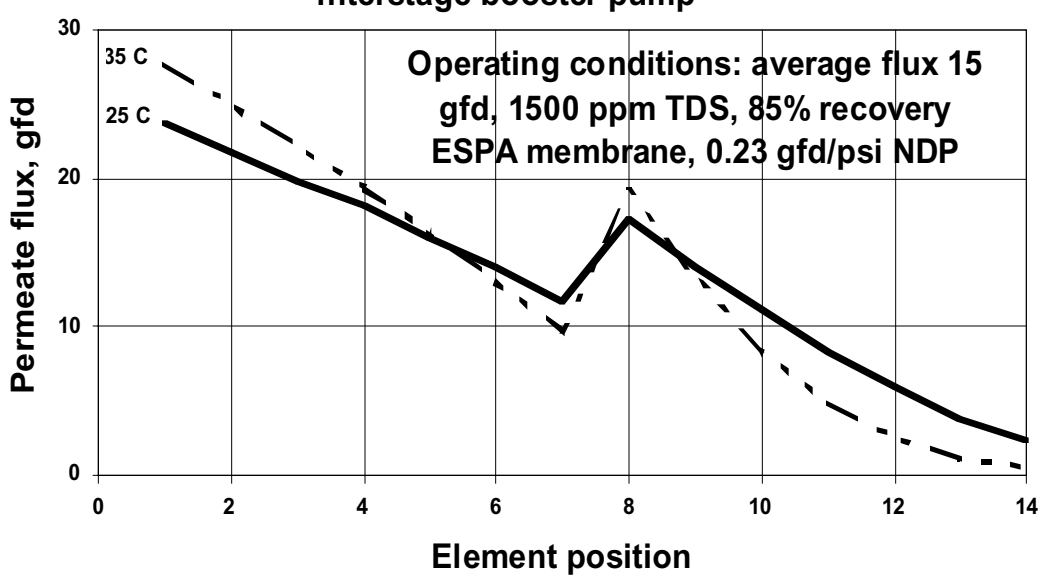

has to be added to the power used by the main pump. Table no. 3 contains results of calculations of specific power consumption for different system designs. For the calculations of power

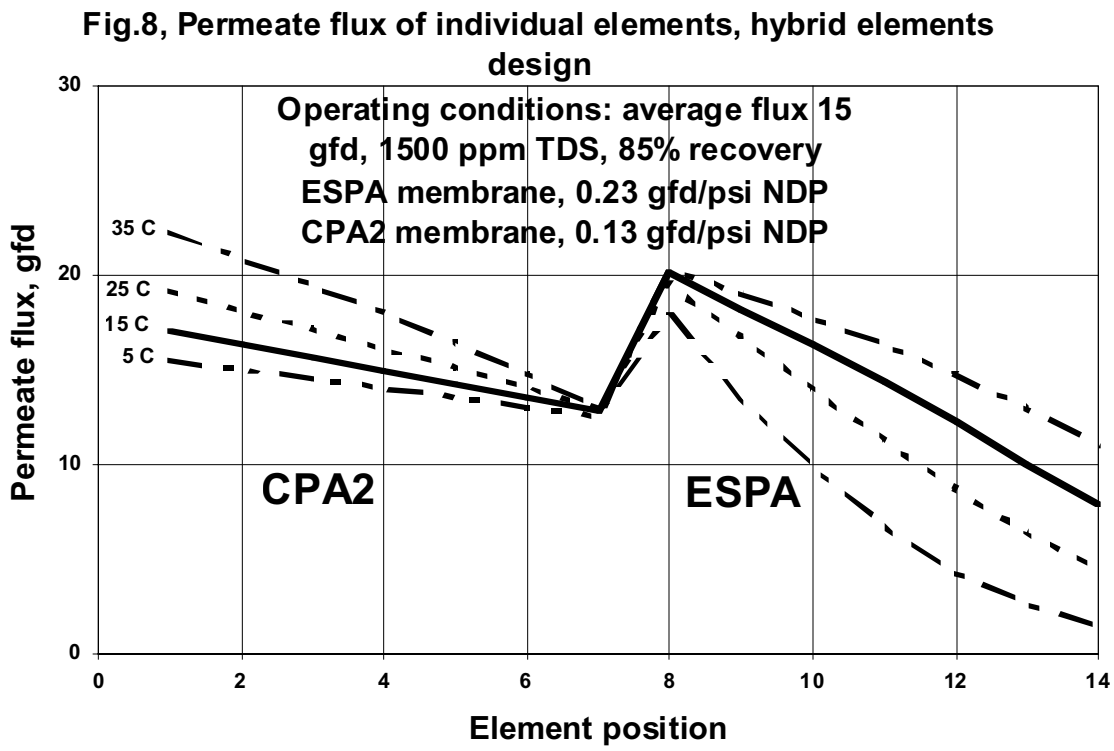

consumption, a pump efficiency of 82% and an electric motor efficiency of 93% has been assumed. Comparing the power consumption of RO units equipped with conventional CPA2 and low pressure ESPA, it is evident that the feed water temperature affects power consumption.

Table 3, Power consumption of various system configurations at average permeate flux rate of 15 and 20 gfd.

Feed salinity: 1500 ppm, recovery rate: 85%								
	Average flux 15 GFD				Average flux 20 GFD			
Feed temperature, C	5	15	25	35	5	15	25	35
Specific power consumption, kWhr/kgallon								
CPA2	3.33	2.61	1.97	1.85	4.31	3.37	2.72	2.31
ESPA	2.08	1.70	1.51	1.44	2.65	2.16	1.85	1.66
ESPA + booster	-	1.78	1.51	1.40	-	-	1.82	1.63
Hybrid CPA2+ESPA	2.69	2.16	1.82	1.63	3.48	2.72	2.31	2.01

The difference in power consumption for the two membrane types decreases both in absolute value and as a percent fraction with increasing feed water temperature. The use of an interstage booster, to improve the flux distribution of systems equipped with ESPA membranes does not

result in a significant change in power consumption. Power consumption of hybrid systems; i.e, use CPA2 with ESPA membrane elements in one unit, is between the power consumption values for single type membrane systems. Compared to a system configuration with an interstage booster, the hybrid design provides a simple, low cost solution to uneven flux contribution at somewhat higher power consumption. Use of high specific flux membranes results in very low concentrate pressure. Therefore, use of power recovery devices is less economical than it is in conventional systems. Fig. 9 shows the potential reduction of specific power consumption as a function of feed salinity. For calculations the total efficiency of power recovery device of 75% was used at the recovery rate values as indicated in the graph. It was assumed that the pressure available for the power recovery turbine was equal to the value of the osmotic pressure of the concentrate. The results indicate low economic feasibility of applying a power recovery device in the low and mid range of feed water salinity for RO systems equipped with ESPA membranes. The range of feasibility will be affected to some extent by the electricity cost.

Fig.9, Power recovery in a low pressure RO system

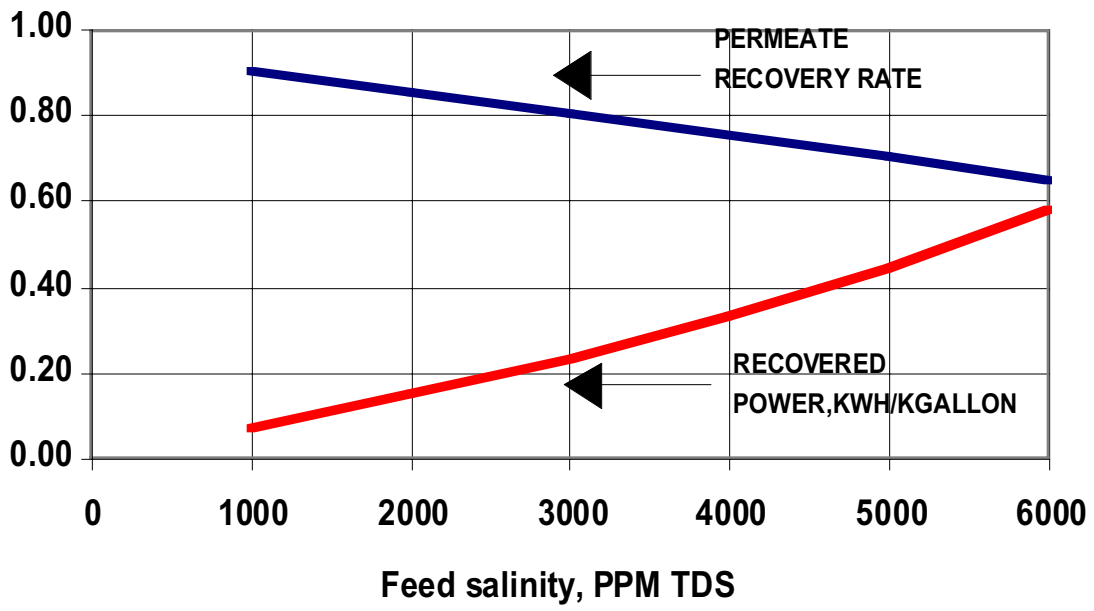

Summary

The introduction of low pressure, high rejection ESPA membranes enables the achievement of one of the goals of commercial RO technology: the ability to operate a given RO system at the minimum value of feed pressure, which is the pressure equal to the osmotic pressure of the concentrate plus the pressure losses along the system. However, at the operating conditions of high feed water temperature, high feed water salinity or high permeate recovery rate, a conditions could be created of excessive permeate flux rate from the lead elements and negligible NDP at the end of the system. This is due to a very high specific permeate flux value of the ESPA membranes. Such operating condition results in higher permeate salinity, and possibility of increasing fouling rate. At high feed temperature, the flux rate of the lead elements could exceed the nominal design flux value of the element model. Such high permeate flow may result in increased pressure losses in the permeate channel and a decrease in the hydraulic efficiency of the elements. Corrective measures could include the use of an interstage pump or a hybrid membrane system design. The hybrid design consists of the use of membranes with lower specific permeate flux in the lead position (first stage), followed by high flux membranes. The hybrid design does not utilize the full extent of energy savings possible with the ESPA membranes, but provides more uniform flux distribution and improved permeate quality. Due to the low values of NDP required by the ESPA membranes, a high permeate flux system design becomes more economically attractive. However, operation at higher overall values of permeate flux will result in even higher flux values in the lead elements. This may result in a significant decrease of element efficiency and may require the improvement of the permeate channel design. Due to the limitation imposed by osmotic pressure of the concentrate, there is no practical incentive for an additional increase of specific permeate flux of brackish membranes, beyond the level achieved recently with ESPA membranes. Any additional decrease in power consumption will be marginal. Future improvement will probably target a decrease of a salt passage. The current levels of salt rejection of ESPA membranes provide satisfactory permeate quality for almost all potable and industrial applications. With an additional increase in salt rejection this type of membrane will have a strong economic advantage over conventional composite membranes also in applications where product salinity is the most important parameter, such as supplementing or replacing ion exchange equipment in water treatment system producing process water for industrial applications.